Jazzy Elite Series

OWNER'S MANUAL

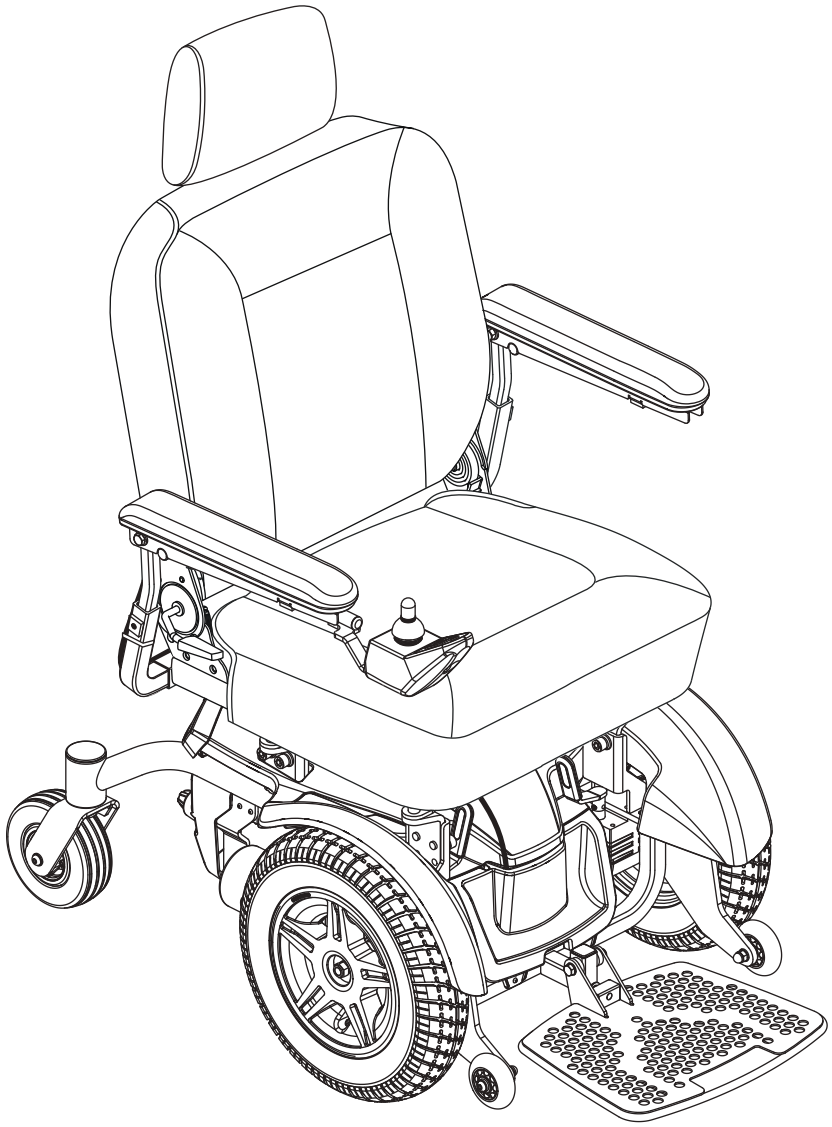

Including Models: Jazzy Elite HD and Jazzy Elite 14

Pride®
Mobility Products Corp.
www.pridemobility.com

SAFETY GUIDELINES

WARNING! An authorized Pride Provider or a qualified technician must perform the initial setup of this power chair and must perform all of the procedures in this manual.

The symbols below are used throughout this owner's manual and on the power chair to identify warnings and important information. It is very important for you to read them and understand them completely.

WARNING! Indicates a potentially hazardous condition/situation. Failure to follow designated procedures can cause either personal injury, component damage, or malfunction. On the product, this icon is represented as a black symbol on a yellow triangle with a black border.

MANDATORY! These actions should be performed as specified. Failure to perform mandatory actions can cause personal injury and/or equipment damage. On the product, this icon is represented as a white symbol on a blue dot with a white border.

PROHIBITED! These actions are prohibited. These actions should not be performed at any time or in any circumstances. Performing a prohibited action can cause personal injury and/or equipment damage. On the product, this icon is represented as a black symbol with a red circle and red slash.

INTENDED USE

The intended use of the Pride Mobility Products device is to provide mobility to persons limited to a seated position that have the capability of operating a powered wheelchair.

Quick Reference Information

Authorized Pride Provider: _____

Address: _____

Phone Number: _____

Purchase Date: _____

NOTE: This owner's manual is compiled from the latest specifications and product information available at the time of publication. We reserve the right to make changes as they become necessary. Any changes to our products may cause slight variations between the illustrations and explanations in this manual and the product you have purchased. The latest/current version of this manual is available on our website.

Copyright © 2012
Pride Mobility Products Corp.
INFMANU4371/Rev B/October 2012

CONTENTS

I. INTRODUCTION 4

II. SAFETY 6

III. YOUR POWER CHAIR 8

IV. ASSEMBLY 12

V. COMFORT ADJUSTMENTS 13

VI. BATTERIES AND CHARGING 19

VII. CARE AND MAINTENANCE 23

LANGUAGE USAGE

This owner's manual is intended for distribution in all English-speaking countries where Pride Power Chairs are sold. We have chosen to compose this manual using language and spelling common to the USA. Since we recognize that not all English-speaking countries use the same words or spellings, please refer to the following chart for some common word variations that may be encountered throughout this manual.

USA	Variation		USA	Variation		USA	Variation
asphalt	tarmac		backward(s)	rearward(s)		center	centre
color	colour		cord	lead		curb	kerb
elevator	lift		meter	metre		provider	dealer; agent
sidewalk	pavement		tire	tyre		trunk	boot
turn signal	turn indicator		yard	grounds		wrench	spanner
caster	castor		pocketbook	handbag		counterclockwise	anticlockwise

Figure 1. Word Variations

I. INTRODUCTION

SAFETY

WELCOME to Pride Mobility Products (Pride). The power chair you have purchased combines state-of-the-art components with **safety**, comfort, and styling in mind. We are confident that these design features will provide you with the conveniences you expect during your daily activities. Once you understand how to **safely** operate and care for your power chair, it should give you years of trouble-free operation and service.

Read and **follow** all instructions, warnings, and notes in this manual before attempting to operate your power chair for the first time. You must also read all instructions, warnings, and notes contained in any supplemental instructional booklets for the controller, front riggings, and/or seating system that accompanied your power chair before initial operation. Your **safety** depends upon you, as well as your provider, caretaker, or healthcare professional, in using good judgement.

If there is any information in this manual which you do not understand, or if you require additional assistance for setup or operation, please contact your authorized Pride Provider. **Failure to follow the instructions in this manual and those located on your power chair can lead to personal injury and/or damage to the power chair, and may void the warranty.**

PURCHASER'S AGREEMENT

By accepting delivery of this product, you promise that you will not change, alter, or modify this product or remove or render inoperable or unsafe any guards, shields, or other safety features of this product; fail, refuse, or neglect to install any retrofit kits from time to time provided by Pride to enhance or preserve the safe use of this product.

SHIPPING AND DELIVERY

Before using your power chair, make sure your delivery is complete as some components may be individually packaged. If you do not receive a complete delivery, please contact your authorized Pride Provider immediately. Where damage has occurred during transport, either to the packaging or content, please contact the delivery company responsible.

I. INTRODUCTION

INFORMATION EXCHANGE

We want to hear your questions, comments, and suggestions about this manual. We would also like to hear about the safety and reliability of your new power chair, and about the service you received from your authorized Pride Provider.

Please notify us of any change of address, so we can keep you apprised of important information about safety, new products, and new options that can increase your ability to use and enjoy your power chair. Please feel free to contact us at the address below:

USA:
Pride Mobility Products Corporation
Attn.: Customer Care Department
182 Susquehanna Avenue
Exeter, PA 18643-2694
info@pridemobility.com
1-800-424-8205

Canada:
Pride Mobility Products Company
380 Vansickle Road
St. Catharines, Ontario L2R 6P7
1-888-570-1113

United Kingdom:
Pride Mobility Products Ltd.
32 Wedgwood Road
Bicester, Oxfordshire OX26 4UL
UK

Australia:
Pride Mobility Products Australia Pty. Ltd.
20-24 Apollo Drive
Hallam, Victoria 3803
Australia

NOTE: If you ever lose or misplace your copy of this manual, contact us and we will be glad to send you a new one immediately.

PRODUCT SAFETY SYMBOLS

The symbols below are used on the power chair to identify warnings, mandatory actions, and prohibited actions. It is very important for you to read and understand them completely.

Read and follow the information in the owner's manual.

Locked and in drive mode.

Place unit on level ground and stand to one side when changing from drive mode to freewheel mode or freewheel mode to drive mode.

Unlocked and in freewheel mode.

Manufactured in

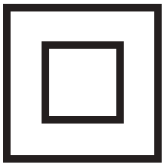

Class II Equipment.

Power chair not rated for occupied transit.

Power chair information label

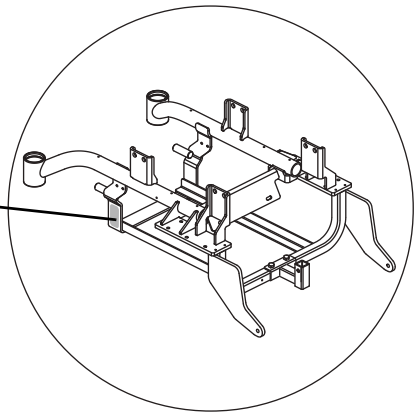

II. SAFETY

GENERAL GUIDELINES

MANDATORY! Do not operate your new power chair for the first time without completely reading and understanding this owner's manual.

Your power chair is a state-of-the-art life-enhancement device designed to increase mobility. Pride provides an extensive variety of products to best fit the individual needs of the power chair user. Please be aware that the final selection and purchasing decision regarding the type of power chair to be used is the responsibility of the power chair user, who is capable of making such a decision, and his/her healthcare professional (i.e., medical doctor, physical therapist, etc.).

The contents of this manual are based on the expectation that a mobility device expert has properly fitted the power chair to the user and has assisted the prescribing healthcare professional and/or the authorized Pride Provider in the instruction process for the use of the product.

There are certain situations, including some medical conditions, where the power chair user will need to practice operating the power chair in the presence of a trained attendant. A trained attendant can be defined as a family member or care professional specially trained in assisting a power chair user in various daily living activities.

As you begin using your power chair during daily activities, you will probably encounter situations in which you will need some practice. Simply take your time and you will soon be in full and confident control as you maneuver through doorways, on and off of elevators, up and down ramps, and over moderate terrain.

Below are some precautions, tips, and other safety considerations that will help you become accustomed to operating your power chair safely.

Pre-Ride Safety Check

Get to know the feel of your power chair and its capabilities. Pride recommends that you perform a safety check before each use to make sure your power chair operates smoothly and safely.

Perform the following inspections prior to using your power chair:

- Check for proper tire inflation. Maintain but do not exceed the psi/bar/kPa air pressure rating indicated on each tire if equipped with pneumatic tires.
- Check all electrical connections. Make sure they are tight and not corroded.
- Check all controller connections to the power base. Make sure they are secured properly.
- Check the brakes. See VII. "Care and Maintenance."
- Check battery charge. See VI. "Batteries and Charging."
- Ensure the manual freewheel levers are in drive mode before sitting on the power chair.

NOTE: If you discover a problem, contact your authorized Pride Provider for assistance.

III. YOUR POWER CHAIR

THE JAZZY ELITE SERIES POWER CHAIR

The Jazzy Elite Series Power Chair has two main assemblies: the seat assembly and the power base assembly. **See figure 1.** Typically, the seat assembly includes the armrests, seatback, and seat base. The power base assembly includes two motor/brake assemblies, two drive wheels, two rear caster wheels, two front anti-tip wheels, two batteries, and wiring harnesses.

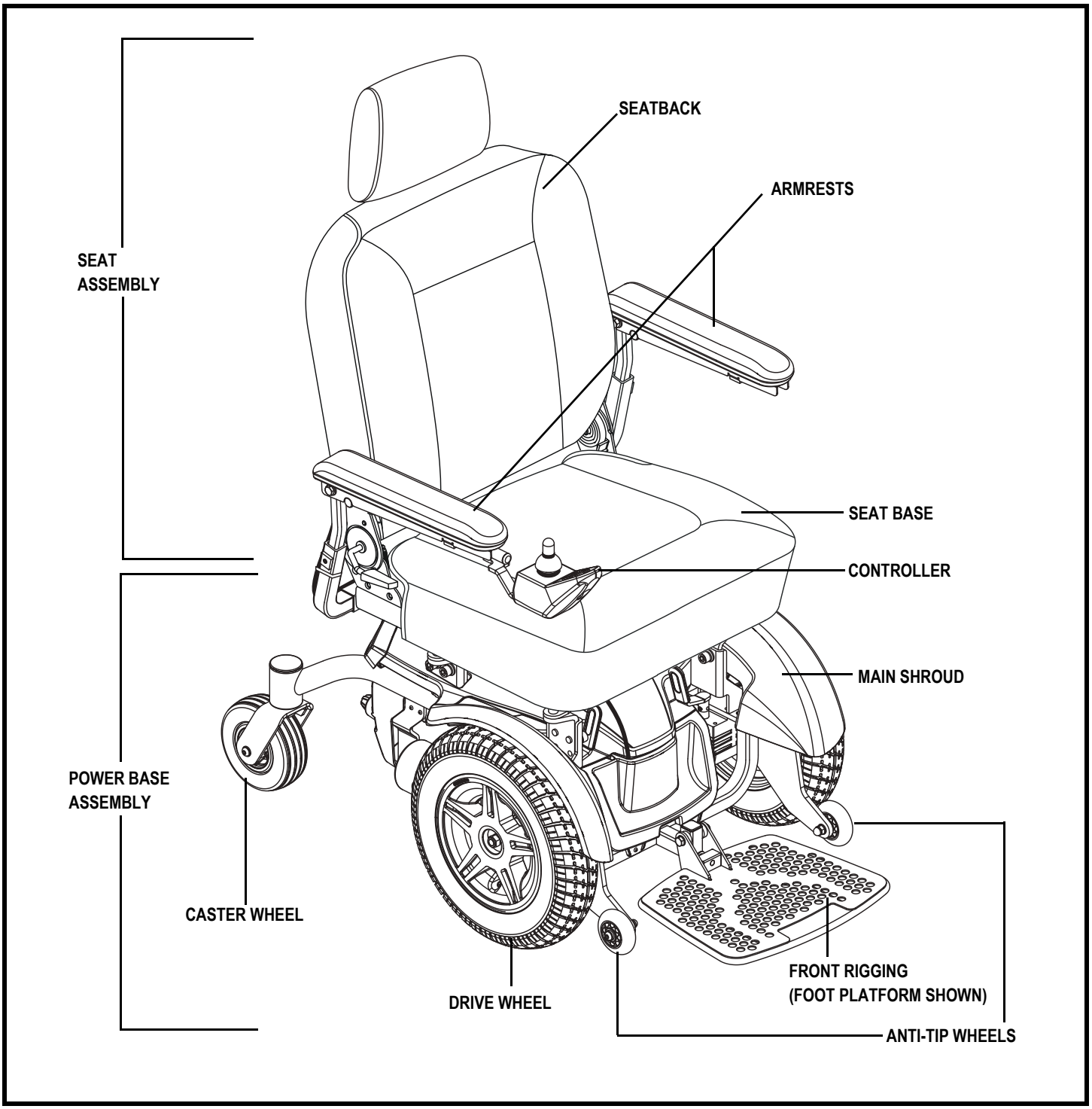

Figure 1. The Jazzy Elite Series Power Chair

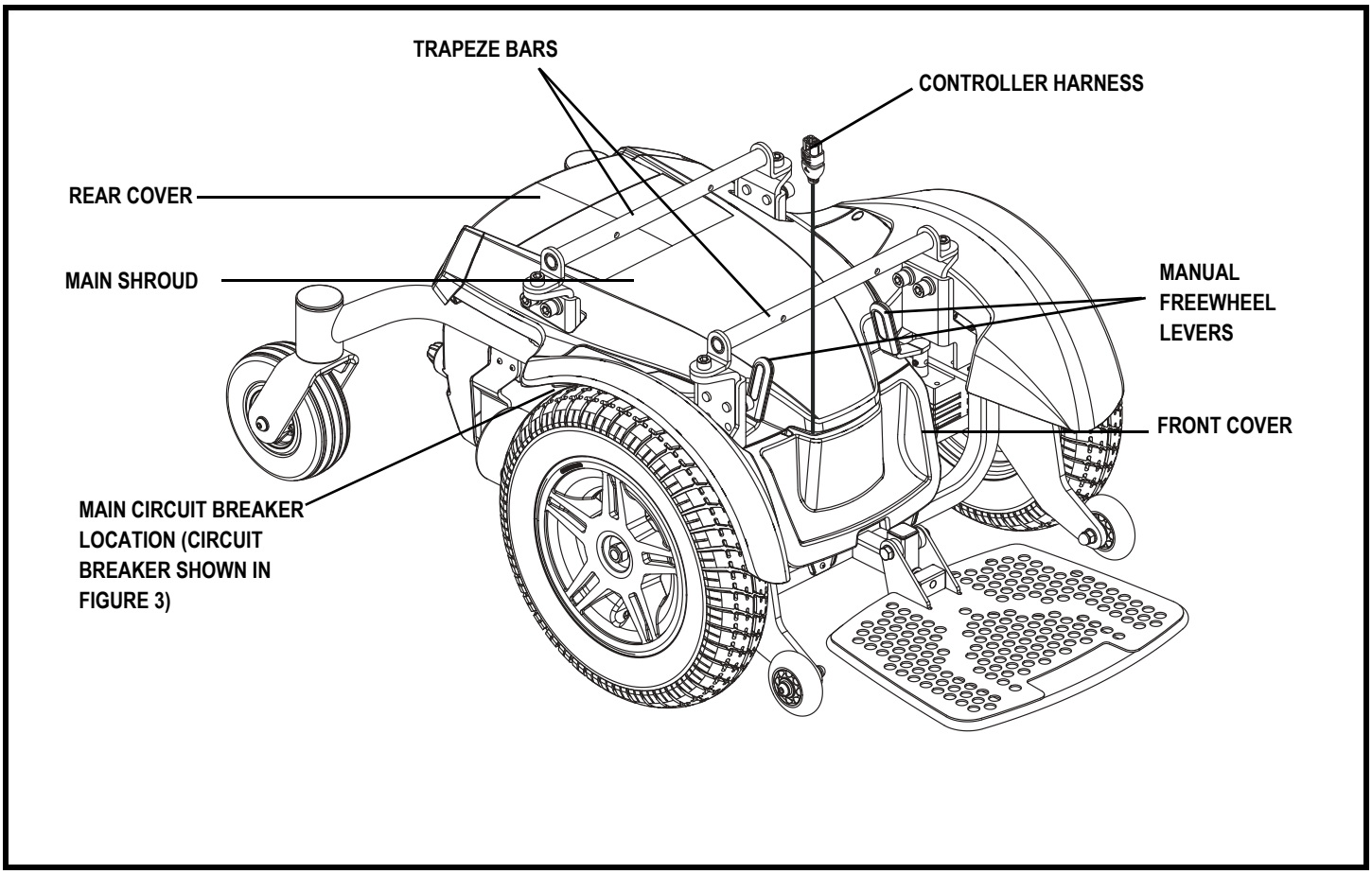

Figure 2. The Jazzy Elite Series Power Base

Electrical Components

The electrical components are located either on or inside the power base. The main circuit breaker is located on the right side of the power base. The power module is located under the front cover. **See figure 3.**

Main Circuit Breaker: The main circuit breaker is a safety feature built into your power chair. When the batteries and the motors are heavily strained (e.g., from excessive loads), the main circuit breaker trips to prevent damage to the motors and the electronics. If the circuit trips, allow your power chair to "rest" for approximately one minute. Next, push in the circuit breaker button, turn on the controller, and continue normal operation. If the main circuit breaker continues to trip repeatedly, contact your authorized Pride Provider. **See figure 3.**

Power Module: Provides connection between the controller and the motors and batteries.

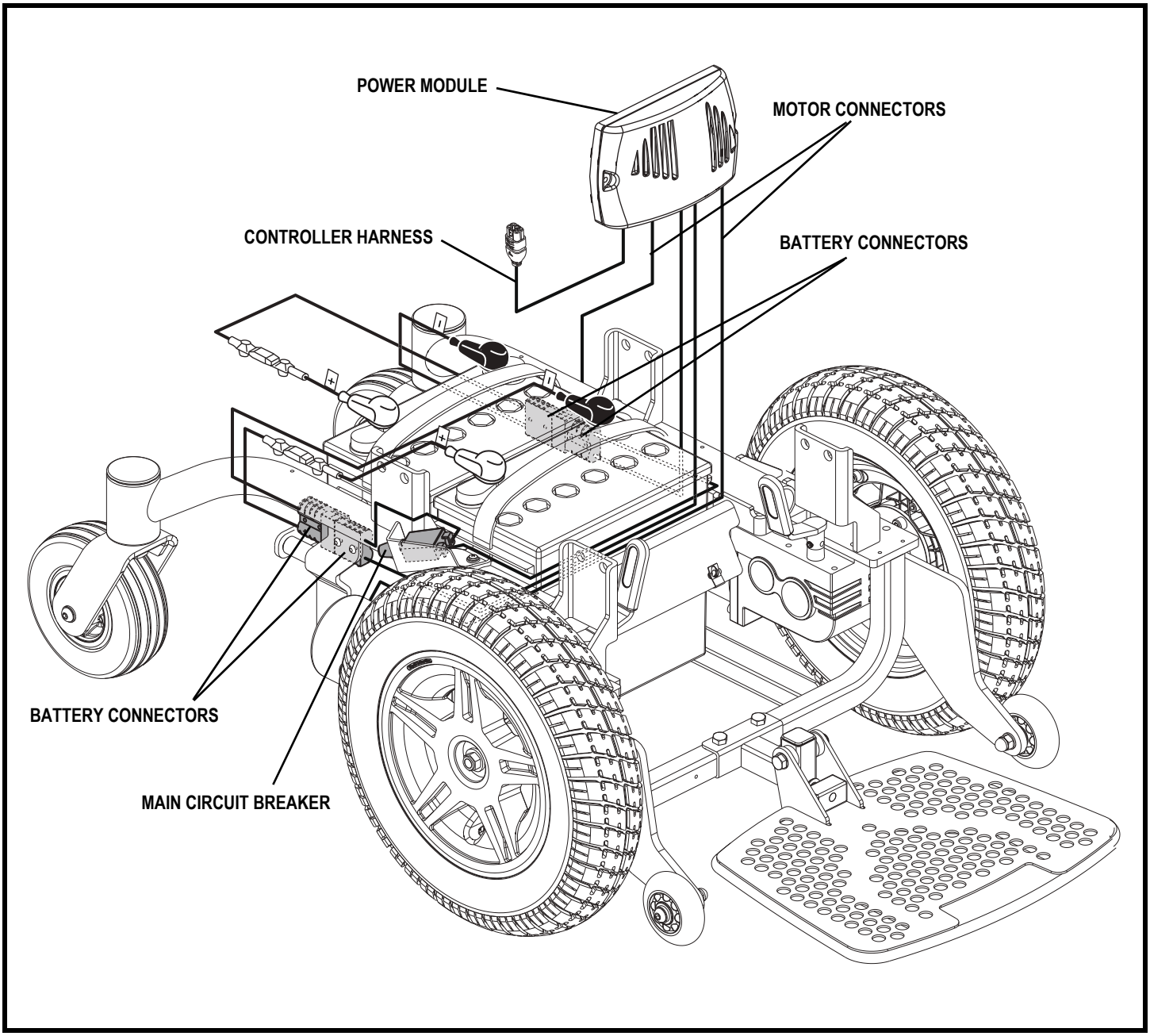

Figure 3. Jazzy Elite Series Electrical Components

Manual Freewheel Levers

Your power chair has a manual freewheel lever on each motor. Manual freewheel levers enable you to disengage the drive motors from the gearboxes and maneuver the chair manually.

WARNING! Do not use the power chair while the drive motors are disengaged! Do not disengage the drive motors when the power chair is on an incline or decline, as the unit could roll on its own. Only engage the freewheel mode when on a level surface.

WARNING! It is important to remember that when your power chair is in freewheel mode, the braking system is disengaged.

To engage or disengage the drive motors:

1. Locate the lever on the top of the power base.
2. Rotate both levers inward toward the seat to engage the drive motors (drive mode). **See figure 4.**
3. Rotate both levers outward away from the seat to disengage the drive motors (freewheel mode). **See figure 5.**

If a lever is difficult to move in either direction, slightly rock the power chair back and forth. The lever should then move to the desired position.

WARNING! Do not use the freewheel lever handles as tie-down points to secure this product.

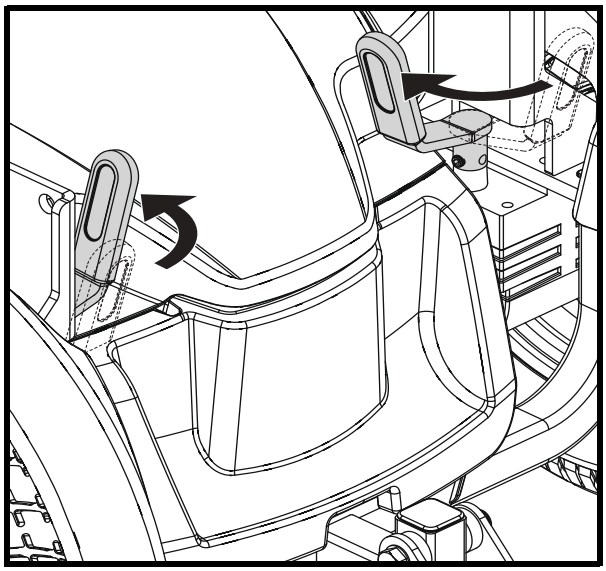

Figure 4. Drive Mode (Drive Engaged)

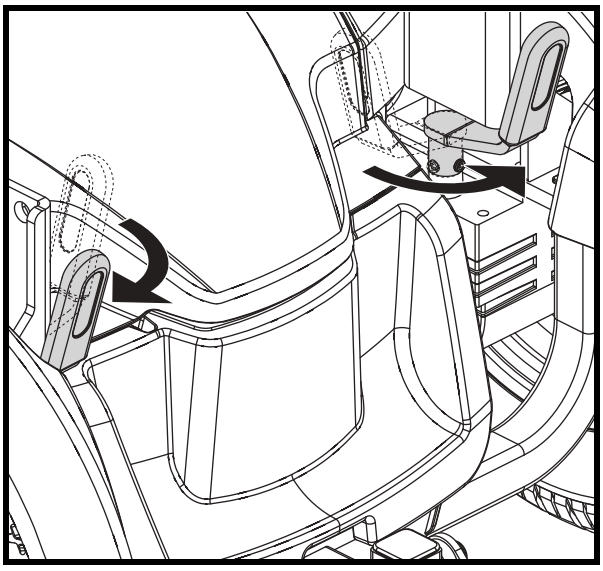

Figure 5. Freewheel Mode (Drive Disengaged)

NOTE: Any nylon insert lock nut removed during the disassembly or adjustment of the power chair must be replaced with a new nylon insert lock nut. Nylon insert lock nuts should not be reused as it may cause damage to the nylon insert, resulting in a less secure fit. Replacement nylon insert lock nuts are available at local hardware stores or by contacting your authorized Pride Provider.

Seat Installation

It may be necessary to install the seat either prior to initial operation or after transporting your power chair. Contour seats are attached to the power base with the Universal Mounting System (UMS). The UMS consists of universal parts that may be attached to the seat, regardless of seat width or seat depth. The two main components are aluminum extrusions mounted to the seat base. These extrusions attach to a pair of trapeze bars that are mounted to the power base. **See figure 6.**

NOTE: If your power chair is equipped with a Synergy Seat, refer to the information provided in separate manuals.

WARNING! Do not pick up the seat frame by the armrests. They are free to pivot, and you may lose control of the seat if they do so.

To install the seat:

1. Tilt the seat back and slide the rear extrusion onto the rear trapeze bar. **See figure 6.**
2. Lower the front extrusion onto the front trapeze bar until the seat locks into place.
3. Flip the seat latch safety down.

WARNING! Make sure the seat latch safety is flipped down before using your power chair.

4. Install the controller and route the harness to the back of the seat. **See figures 7.**

MANDATORY! Prevent controller harness damage! Avoid routing the controller harness on the outside of the armrest pad. Route the harness under the armrest or toward the inside of the armrest pad. Use correct tie-down points for controller harness to prevent the harness from getting caught in the drive tires, pinched in the seat frame, or damaged when passing through doorways.

5. Plug the controller connector into the front of the power base. **See figure 3.**
6. Secure the controller harness to the armrest receiver with wire ties. **See figure 7.**

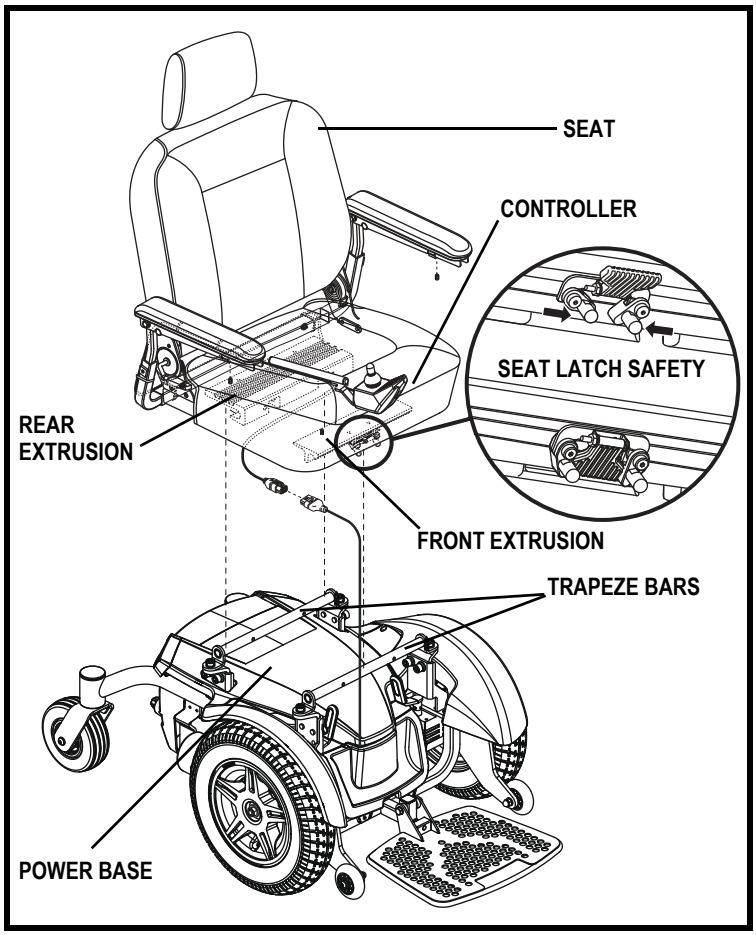

Figure 6. Seat and Controller Assembly

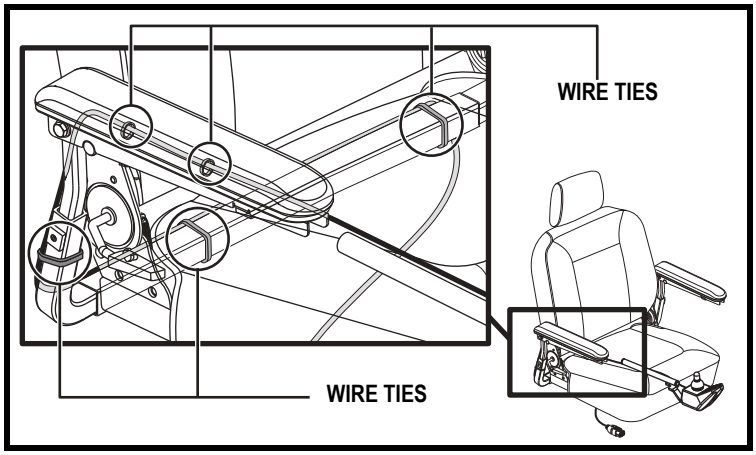

Figure 7. Controller Harness Routing

COMFORT ADJUSTMENTS

After becoming familiar with your power chair's operation, you may find the need to make some adjustments to increase your comfort, such as seat height, armrest angle, foot platform angle, depth, and height, and controller position. Refer to the following information before making comfort adjustments.

WARNING! The center of gravity of your power chair was factory set to a position that meets the needs of the demographic majority of users. Your authorized Pride Provider has evaluated your power chair and made any necessary adjustments to suit your specific requirements. Do not change your seating configuration without first contacting Pride Mobility Products or your authorized Pride Provider.

WARNING! Some power chair components are heavy. You may need assistance to lift or carry them. Please refer to the product specifications for specific component weights before you disassemble the power chair.

WARNING! Remove the occupant from the power chair before making any adjustments.

You may need the following to make comfort adjustments:

- metric/standard socket set and ratchet
- adjustable wrench
- metric/standard hex key set
- thread lock

Seat Height Adjustment

You can change the seat height to one of three positions in 1-in. (2.54-cm) increments. If you raise or lower only one trapeze bar (front or rear), you can also change the seat base angle (dump).

To change the seat height:

1. Turn off the power to the controller.
2. Make sure the power chair is in drive mode.
3. Unplug the controller connector(s) from the power base. **See figure 3.**
4. Flip up the seat latch safety. **See figure 6.**
5. Squeeze the seat latch and release the seat from the front trapeze bar.
6. Slide the seat forward and remove it from the power base.
7. Remove the hardware that attaches the trapeze bars to the seat interface weldments. **See figures 6 and 8.**
8. Move the trapeze bars up or down to the desired height.

NOTE: Change the seat dump by raising or lowering only one trapeze bar (front or rear).

9. Reinstall the hardware.
10. Reinstall the seat.
11. Reconnect the controller to the power base.

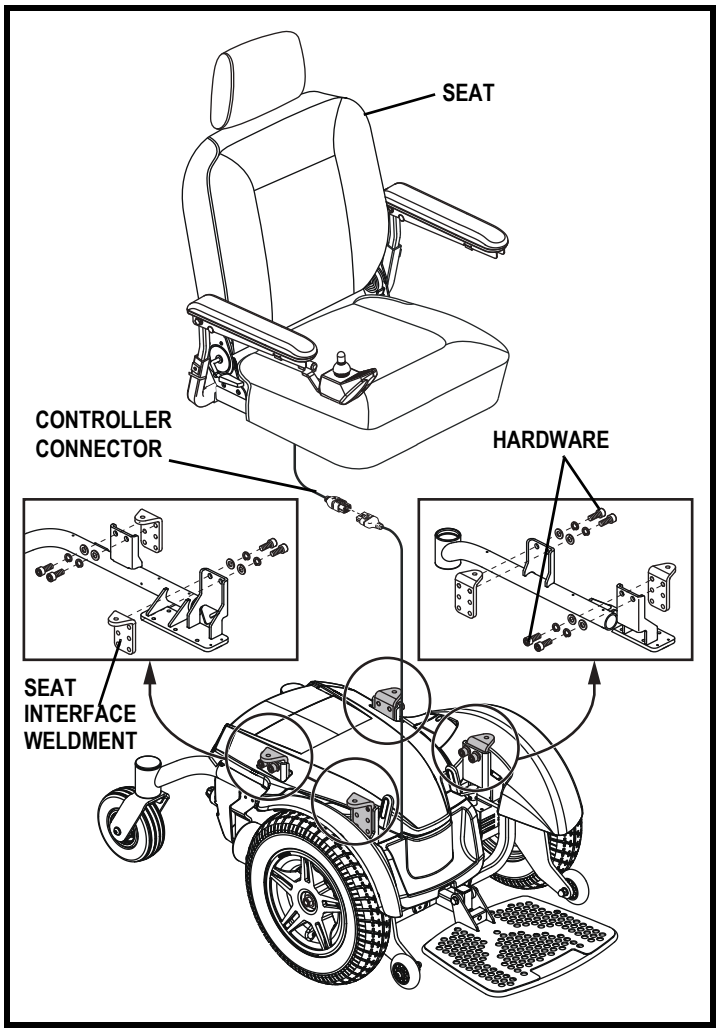

Figure 8. Seat Height Adjustment

V. COMFORT ADJUSTMENTS

Seat Position

You can move the seat forward or rearward by changing the extrusion mounting position.

To change the position:

1. Turn off the power to the controller.
2. Make sure the power chair is in drive mode.
3. Unplug the controller connector(s) from the power base.
4. Remove the seat from the power base.
5. Remove both extrusions from the bottom of the seat.
6. Reposition the extrusions on a different set of mounting holes. You must move both extrusions the same number of holes either forward or backwards. **See figure 9.**

WARNING! Changing the position of the seat can cause instability. Do not change your seating configuration without first contacting Pride Mobility Products or your authorized Pride Provider.

WARNING! Failure to properly adjust the programming or center of gravity of the power chair to meet the individual needs of the client can result in personal injury and/or equipment damage.

7. Fasten the extrusions back onto the bottom of the seat.
8. Reinstall the seat.
9. Reconnect the controller to the power base.

Seat Depth	270-400 lbs. (122-181 kg)	401-450 lbs. (182-204 kg)
18 in. deep	Allowed	Not Allowed
20 in. deep	Allowed	Allowed
22 in. deep	Allowed	Allowed
24 in. deep	Allowed	Allowed

NOTE: Pride Mobility Products offers a wide variety of seating options available on power chairs in the Heavy Duty category, which covers a wide range of user weights from 270-450 lbs. (122-204 kg). RESNA testing to determine seat stability for the range of seat depths across the user weight range in the Heavy Duty category has been performed. Refer to the chart above for Pride's recommendations for allowable seat depths by user weight range.

WARNING! Maximum weight capacity is reduced to 400 lbs. (181 kg) on 18-in. deep seat depth configurations.

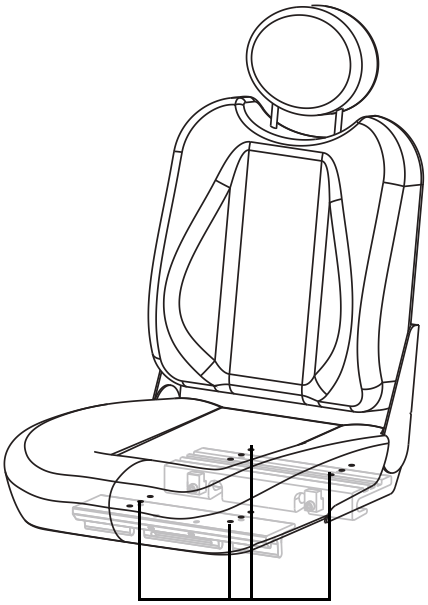

WARNING! The center of gravity of your power chair was factory set to a position that meets the needs of the demographic majority of users. Your authorized Pride Provider has evaluated your power chair and made any necessary adjustments to suit your specific requirements. Adjusting the seat position can cause instability. Do not change your seating configuration without first contacting Pride Mobility Products or your authorized Pride Provider.

Figure 9. Seat Position Adjustment

Manual Recline Seatback Adjustment

If your power chair is equipped with a manual recline seatback, you can adjust the seatback angle using either hardware or the seatback release lever. **See figure 10.**

To adjust the recline angle using the hardware:

1. Remove the seatback angle adjustment screw from each seat hinge.
2. Reposition the seatback to the desired angle.
3. Reinstall the seatback angle adjustment screw into each seat hinge.

To adjust the recline angle using the seatback release lever:

1. Pull up on the seatback release lever.
2. Lean forward or backward to the desired position.
3. Release the lever.

Armrest Width Adjustment

You can change each armrest's width independently of the other.

NOTE: Changing the armrest width may increase the overall width of your power chair.

To change the armrest width:

1. Locate the armrest width adjustment setscrew on each side of the armrest receiver bracket. **See figure 10.**
2. Loosen the the armrest width adjustment setscrew.
3. Slide the armrests in or out to the desired width.
4. Tighten the armrest width adjustment setscrew.

Armrest Angle Adjustment

To change the armrest angle:

1. Lift the armrest straight up so that it is perpendicular to the floor.
2. Loosen the jam nut, if equipped.
3. Turn the adjustment screw to raise or lower the front of the armrest.
4. Tighten the jam nut, if equipped, to lock the adjustment screw into place.

Armrest Height Adjustment

To change the armrest height:

1. Loosen the setscrew on the armrest. **See figure 10.**
2. Raise or lower the armrest to the desired height.
3. Tighten the setscrew to secure the armrest.

NOTE: Ensure all hardware is securely fastened after making any adjustments.

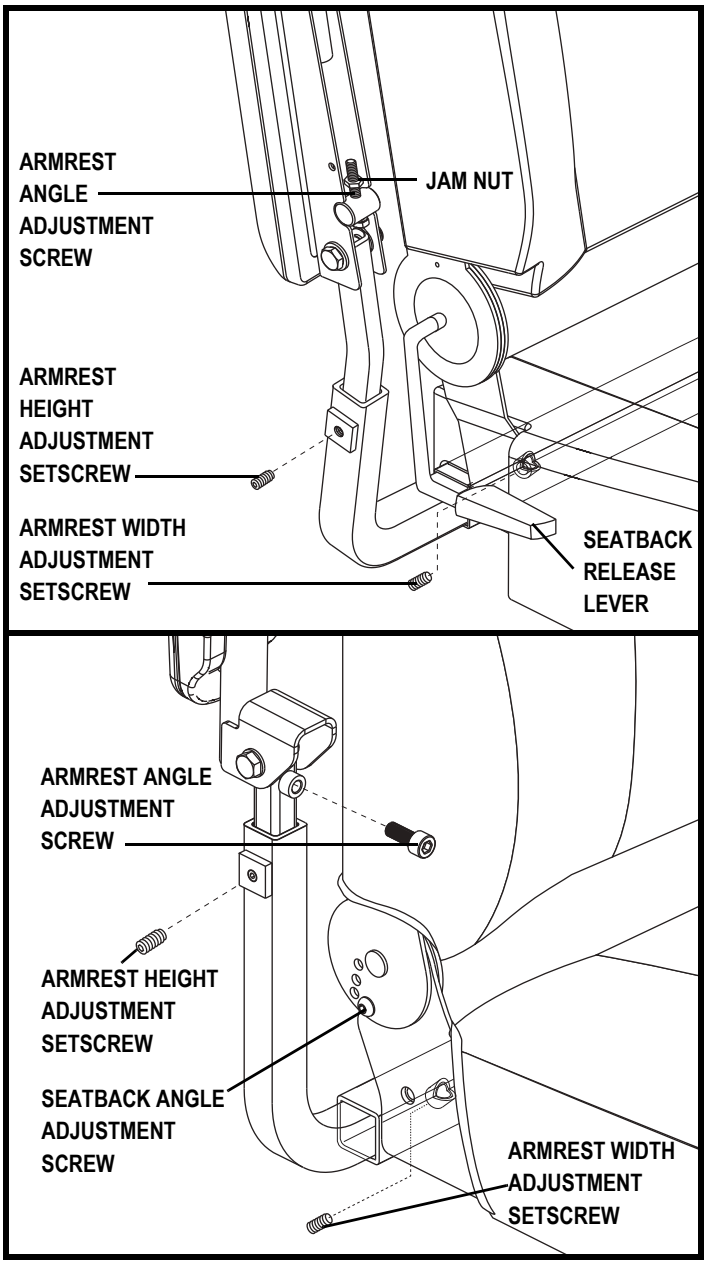

Figure 10. Armrest and Seatback Adjustments

Controller Position

You can move the controller in toward or out away from the armrest, or change the position of the controller for either left-hand or right-hand use.

WARNING! Do not place the controller harness so that it can be pinched in the seat frame or the power base frame.

To extend the controller:

1. Flip up the armrest so it is perpendicular to the floor.
2. Loosen the setscrew on the controller bracket, if equipped. **See figure 11.**
3. Slide the controller into or out of the armrest to the desired position.
4. Tighten the setscrew to secure the controller.

To change the controller position:

1. Turn off the power to the controller.
2. Unplug the controller harness from the power base.
3. Cut the wire tie(s) that secure the controller harness to the armrest and seat.
4. Flip up the armrest so it is perpendicular to the floor.
5. Loosen the setscrew on the controller bracket.
6. Slide the controller out of the armrest.
7. Loosen the setscrew in the other armrest.
8. Place the controller in the other armrest.
9. Tighten the setscrew to secure the controller.
10. Route the controller harness along the seat frame and secure with wire ties. **See figure 7.**
11. Plug the controller connector into the power base. **See figure 2.**

Foot Platform Position

You can adjust the angle of the foot platform.

To adjust the foot platform angle:

1. Flip up the foot platform and locate the angle adjustment screw. **See figure 12.**
2. Turn the angle adjustment screw to raise or lower the front of the foot platform.

You may be able to adjust the height and depth of the foot platform. **See figure 12.**

To adjust the foot platform height:

1. Remove the height adjustment hardware.
2. Move the foot platform to the desired height.
3. Reinstall the height adjustment hardware.

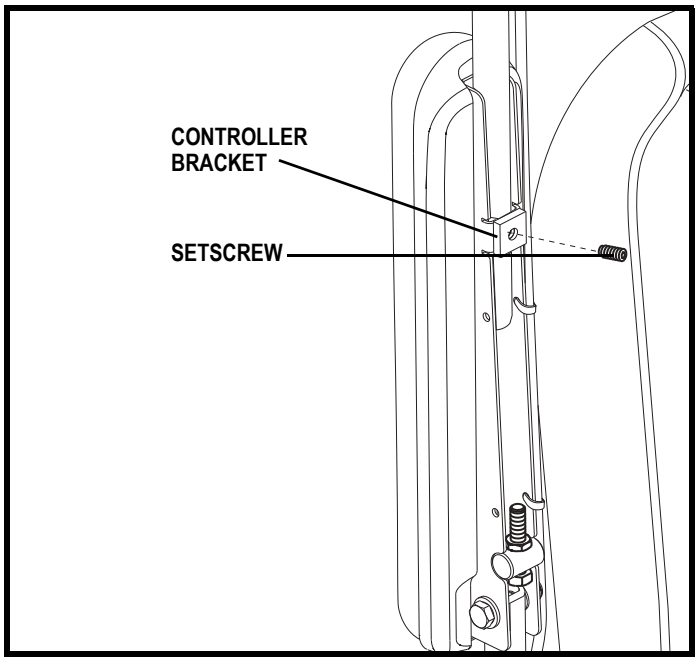

Figure 11. Underside of Armrest

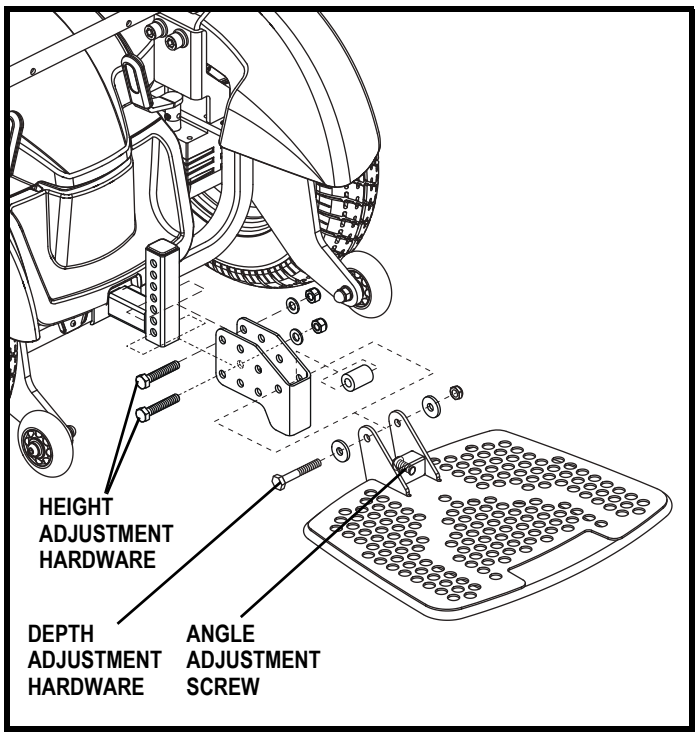

Figure 12. Foot Platform Adjustment

To adjust the foot platform depth:
1. Remove the depth adjustment hardware.
2. Move the foot platform to the desired depth.
3. Reinstall the depth adjustment hardware.

Swing-away Footrests

Swing-away Footrests (SFRs) enable you to rotate the footrests to the side before you transfer onto or off of your power chair. **See figure 13.**

To rotate the SFRs:
1. Push in the release lever.
2. Rotate the SFRs.

To adjust the SFR length:
1. Remove the adjustment screws from the footrest extension.
2. Slide the footrest up or down to the desired length.
3. Reinstall the two adjustment screws.

Elevating Leg Rests

Elevating Leg Rests (ELRs) offer an infinite range of adjustment for the leg angle and a footrest adjustment range of 12-19 in. (30.48-48.26 cm). **See figure 14.**

To rotate the ELRs:
1. Push in release lever A.
2. Rotate the ELRs.

To adjust the ELR angle:
1. Push down release lever B.
2. Move the leg rest to the desired angle.

To adjust the ELR length:
1. Remove the two adjustment screws from the rear of each leg rest extension.
2. Slide the leg rest up or down to the desired length.
3. Reinstall the two adjustment screws.

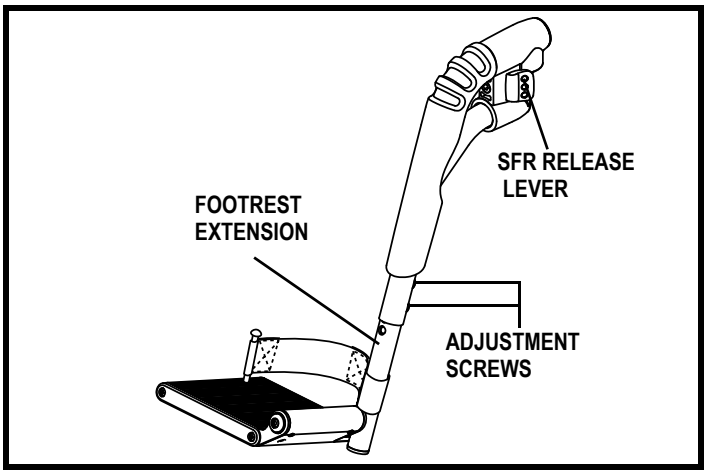

Figure 13. Swing-away Footrests

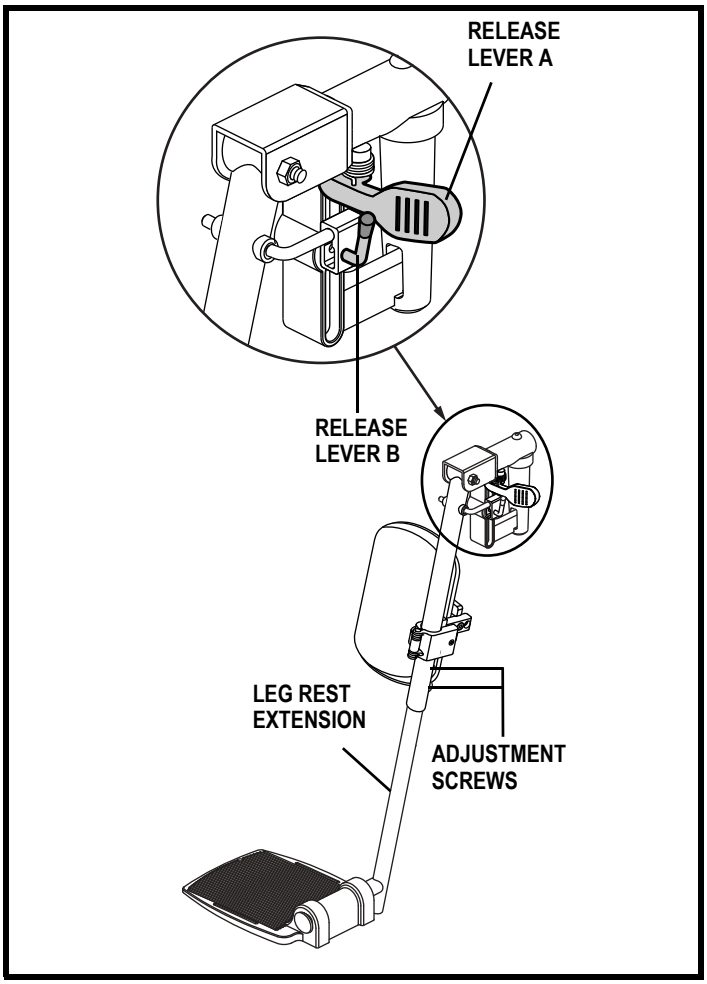

Figure 14. Elevating Leg Rests

Positioning Belt

Your power chair may be equipped with a positioning belt that can be adjusted for operator comfort. **See figure 15.** The positioning belt is designed to support the operator so that he/she does not slide down or forward in the seat. The positioning belt is not designed for use as a restraining device.

WARNING! The positioning belt should be secured at all times. Never allow the positioning belt to hang or drag on the floor as it may become entangled.

To install the positioning belt:

1. Remove the rearmost screw that holds the seat hinge to the seat base on both the left and right seat hinges.
2. Insert the screw through the supplied washer, through the positioning belt and into the seat base for each side of the power chair seat.
3. Tighten both screws.

To adjust the positioning belt for operator comfort:

1. Once seated, insert the metal tab on one side of the belt into the plastic housing on the opposite side until you hear a click. **See figure 15.**
2. Pull the excess strap attached to the metal tab until it is secure, but not so tight as to cause discomfort.

To release the positioning belt:

1. Press the push button mechanism on the plastic housing.

MANDATORY! Make sure the positioning belt is properly secured to the power chair and is adjusted for operator comfort before each use.

MANDATORY! Inspect the positioning belt for loose parts or damage, including tears, worn spots, bent hardware, damaged latch mechanism, dirt or debris, before each use of the power chair. If you discover a problem, contact your authorized Pride Provider for maintenance and repair.

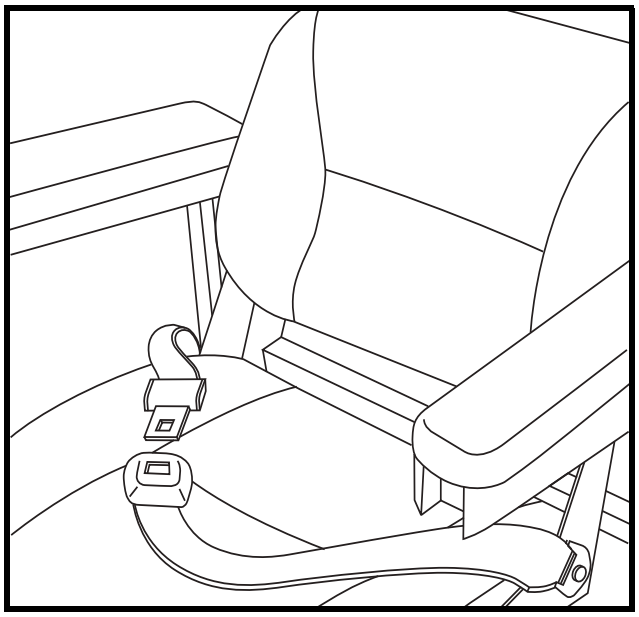

Figure 15. Positioning Belt Adjustment

VI. BATTERIES AND CHARGING

BATTERIES AND CHARGING

Your power chair uses two long-lasting, 12-volt, deep-cycle batteries. These batteries are sealed and maintenance free. Since they are sealed, there is no need to check the electrolyte (fluid) level. Deep-cycle batteries are designed to handle a longer and deeper discharge. Though they are similar in appearance to automotive batteries, they are not interchangeable. Automotive batteries are not designed to handle a long, deep discharge, and also are unsafe for use in power chairs.

MANDATORY! Battery posts, terminals, and related accessories contain lead and lead compounds. Wear goggles and gloves when handling batteries and wash hands after handling.

PROHIBITED! Always use two batteries of the exact same type, chemistry, and amp-hour (Ah) capacity. Refer to the specifications table in this manual and in the manual supplied with the battery charger for recommended type and capacities.

WARNING! Contact your authorized Pride Provider if you have any questions regarding the batteries in your power chair.

Charging the Batteries

The battery charger is essential in providing long life for your power chair batteries. It is designed to optimize your power chair's performance by charging the batteries safely, quickly, and easily.

PROHIBITED! Removal of grounding prong can create electrical hazard. If necessary, properly install an approved 3-pronged adapter to an electrical outlet having 2-pronged plug access.

PROHIBITED! Never use an extension cord to plug in your battery charger. Plug the charger directly into a properly wired standard electrical outlet.

PROHIBITED! Do not allow unsupervised children to play near the power chair while the batteries are charging. Pride recommends that you do not charge the batteries while the power chair is occupied.

MANDATORY! Read the battery charging instructions in this manual and in the manual supplied with the battery charger before charging the batteries.

WARNING! Explosive gases may be generated while charging the batteries. Keep the power chair and battery charger away from sources of ignition such as flames or sparks and provide adequate ventilation when charging the batteries.

WARNING! You must recharge your power chair's batteries with the supplied off-board battery charger. Do not use an automotive-type battery charger.

WARNING! Inspect the battery charger, wiring, and connectors for damage before each use. Contact your authorized Pride Provider if damage is found.

WARNING! Do not attempt to open the battery charger case. If the battery charger does not appear to be working correctly, contact your authorized Pride Provider.

WARNING! Be aware that the battery charger case may become hot during charging. Avoid skin contact and do not place on surfaces that may be affected by heat.

WARNING! If the battery charger is equipped with cooling slots, then do not attempt to insert objects through these slots.

WARNING! If your battery charger has not been tested and approved for outdoor use, then do not expose it to adverse or extreme weather conditions. If the battery charger is exposed to adverse or extreme weather conditions, then it must be allowed to adjust to the difference in environmental conditions before use indoors. Refer to the manual supplied with the battery charger for more information.

To charge the batteries using the off-board charger:

1. Position the front of your power chair next to a standard electrical outlet. **See figure 16.**
2. Be certain the controller power is turned off and the freewheel levers are in the engaged position. See III. "Your Power Chair."
3. Plug the off-board charger into the off-board charger/programming socket on the controller. **See figure 16.**
4. Plug the off-board charger into the electrical outlet.

WARNING! The LED lights on the charger indicate different charger conditions at various times: charger power on, charging in progress, and charging complete. If the LED does not indicate that charging is complete within 24 hours, unplug the charger from the outlet and contact your authorized Pride Provider. Refer to the manual supplied with the charger for a complete explanation of these indicators.

5. When the batteries are fully charged, unplug the off-board charger from the electrical outlet and then from the controller.

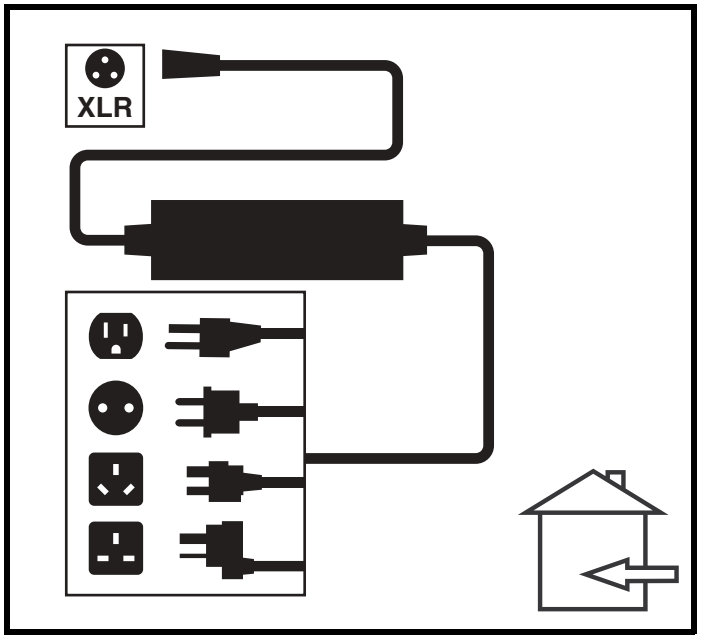

Figure 16. Battery Charging

Battery Break-in

To break in new batteries for maximum efficiency:

1. Fully recharge any new battery prior to its initial use. This brings the battery up to about 90% of its peak performance level.
2. Operate your power chair throughout the house and yard. Move slowly at first, and do not travel too far until you become accustomed to the controls and break in the batteries.
3. Give the batteries another full charge of at least 8 to 14 hours and operate your power chair again. The batteries will now perform at over 90% of their potential.
4. After four or five charging cycles, the batteries will top off at 100% charge and last for an extended period.

Frequently Asked Questions (FAQs)

How does the charger work?

The battery charger takes the standard electrical outlet voltage of 120 VAC (alternating current) and converts it to 24 VDC (direct current). The power chair batteries use direct current to run your power chair. When the battery voltage is low, the charger works harder to charge the battery. As the battery voltage approaches full charge, the charger doesn't work as hard to complete the charging cycle. When the battery is fully charged, the amperage from the charger is nearly at zero. This is how the charger maintains a charge but does not overcharge the battery.

Can I use a different battery charger?

You should use the charger supplied with the power chair. It is the safest, most efficient tool to charge the batteries. We do not recommend using other types of chargers (e.g., an automotive battery charger).

NOTE: Your power chair's charger will not operate after the batteries have been discharged to nearly zero voltage. If this happens, contact your authorized Pride Provider for assistance.

VI. BATTERIES AND CHARGING

How often must I charge the batteries?
Many factors come into play when deciding how often to charge the batteries. You may use your power chair all day on a daily basis or you may not use it for weeks at a time.

- **Daily Use**
  If you use your power chair on a daily basis, charge the batteries as soon as you are finished using your power chair. Your power chair will be ready each morning to give you a full day's service. It is recommended that you charge the batteries at least 8 to 14 hours after daily use. Pride recommends that you charge the batteries for an additional 4 hours after the battery charger indicates that charging is complete.

- **Infrequent Use**
  If you use your power chair infrequently (once a week or less), you should charge the batteries at least once per week for at least 24 hours.

NOTE: Keep your batteries fully charged and avoid deeply discharging your batteries. Refer to the manual supplied with the battery charger for charging instructions. Pride recommends charging your batteries for at least 48 continuous hours once per month to improve battery performance and battery life.

How can I get maximum range or distance per charge?
Rarely do you have an ideal driving situation such as smooth, flat, hard terrain with no wind, hills, or curves. More often you are presented with hills, sidewalk cracks, uneven and loosely packed surfaces, curves, and wind. All of these factors will affect the distance or running time per battery charge. Below are a few suggestions for obtaining the maximum range per charge:

- Always charge the batteries fully prior to your trip.
- Plan your trip in advance to avoid inclines if possible.
- Limit baggage weight to essential items.
- Try to maintain an even speed and avoid stop-and-go driving.
- Pride recommends charging your batteries for at least 48 continuous hours once per month to improve battery performance and battery life.

What type of batteries should I use?
We recommend deep-cycle batteries that are sealed and maintenance free. Both AGM and Gel-Cell are deep-cycle batteries that are similar in performance.

WARNING! Corrosive chemicals contained in batteries. Use only AGM or Gel-Cell batteries to reduce the risk of leakage or explosive conditions.

Why do my new batteries seem weak?
Deep-cycle batteries employ a much different chemical technology than that used in car batteries, nickel-cadmium (nicads), or in other common battery types. Deep-cycle batteries are specifically designed to provide power, drain down their charge, and then accept a relatively quick recharge. AGM and Gel-Cell batteries should be charged as often as possible. They do not have a "memory" like nickel-cadmium batteries.

We work closely with our battery manufacturer to provide a battery that best suits your power chair's specific demands. Fresh batteries arrive regularly and are promptly shipped with a full charge. During shipping, the batteries encounter temperature extremes that may influence initial performance. Heat robs the charge from the battery, and cold slows the power available and extends the time needed to recharge the battery (just as with a car battery).

It might take a few days for the temperature of the battery to stabilize and adjust to its new ambient temperature. More importantly, it will take a few "charging cycles" (a partial drain — then a full recharge) to establish the critical chemical balance that is essential to the battery's peak performance and long life. It will be well worth it to take the time to break in your battery properly.

VI. BATTERIES AND CHARGING

How can I ensure maximum battery life?
A fully charged deep-cycle battery will provide reliable performance and extended battery life. Keep your power chair's batteries fully charged whenever possible. Batteries that are regularly and deeply discharged, infrequently charged, or stored without a full charge may be permanently damaged, causing unreliable power chair operation and limited battery life.

NOTE: The useful life of a battery is quite often a reflection of the care it receives.

How should I store my power chair and its batteries?
If you do not use your power chair regularly, we recommend maintaining battery vitality by charging the batteries at least once per week.

If you do not plan on using your power chair for an extended period, fully charge the batteries prior to storage. Disconnect the battery harnesses and store the power chair in a warm, dry environment. Avoid temperature extremes, such as freezing and excessively hot conditions, and never attempt to charge a frozen battery. A cold or frozen battery should be warmed for several days prior to recharging.

What about public transportation?
AGM and Gel-Cell batteries are designed for application in power chairs and other mobility vehicles. These batteries are Federal Aviation Administration (FAA) approved, allowing safe transportation on aircraft, buses, and trains, as there is no danger of spillage or leakage. We suggest you contact the carrier's ticket counter in advance to determine that carrier's specific requirements.

What about shipping?
If you wish to use a freight company to ship your power chair to your final destination, repack your power chair in the original shipping container and ship the batteries in separate boxes.

VII. CARE AND MAINTENANCE

CARE AND MAINTENANCE

Your Jazzy Elite Series is a sophisticated power chair. Like any motorized vehicle, it requires routine maintenance checks. You can perform some of these checks, but others require assistance from an authorized service representative. Preventive maintenance is very important. If you follow the maintenance checks in this section as scheduled, you can help ensure that your power chair gives you years of trouble-free operation. If you have any doubt as to your power chair's care or operation, contact your authorized Pride Provider.

WARNING! Do not service the power chair when the seat is occupied.

Your power chair, like most electrical equipment, is susceptible to damage from the elements. Avoid damp areas of any kind.

WARNING! Direct or prolonged exposure to water or dampness could cause the power chair to malfunction electronically and mechanically. Water can cause electrical components to corrode and the chair's frame to rust. Power chairs should be examined periodically for signs of corrosion caused by water exposure, bodily fluids exposure, or incontinence. Damaged components should be replaced or treated immediately.

Should your power chair come in contact with water:

1. Dry your power chair as thoroughly as possible with a towel.
2. Allow your power chair to sit in a warm, dry place for 12 hours to allow unseen water to evaporate.
3. Check the joystick operation and the brakes before using your power chair again.
4. If any inconsistencies are found, take your power chair to an authorized service center. Power chairs that are frequently exposed to sources of water, such as incontinence, should be inspected often for corrosion and electronic components may need to be replaced frequently.

Temperature

- Some of the parts of your power chair are susceptible to extreme changes in temperature. Always keep your power chair between the temperatures of 18°F (-8°C) and 122°F (50°C).
- In extremely cold temperatures the batteries may freeze. The specific temperature at which they freeze depends on a number of factors, such as battery charge, usage, and composition of the batteries (e.g., AGM or Gel-Cell).
- Temperatures above 122°F (50°C) may cause your power chair to operate at a reduced speed. This reduced speed is a safety feature built into the controller that helps prevent damage to the motor and other electrical components.

General Guidelines

- Avoid knocking or bumping the controller, especially the joystick.
- Avoid prolonged exposure of your power chair to extreme conditions, such as heat, cold, or moisture.
- Keep the controller clean.
- Check all connectors to ensure that they are all tight and secured properly.
- Make sure pneumatic tires are inflated to the psi/bar/kPa air pressure rating indicated on the tire.

WARNING! Make sure your tires are inflated to the psi/bar/kPa air pressure rating indicated on the tire for pneumatic tires. Do not underinflate or overinflate your tires. Low pressure may result in loss of control, and overinflated tires may burst. Overinflating tires can cause them to explode.

WARNING! Do not use a high pressure hose to inflate your tires.

- Use a rubber conditioner on the tire sidewalls to help preserve them.

WARNING! Never use a rubber conditioner on the tread area of the tires; doing so may make the tires slippery and cause your power chair to skid.

VII. CARE AND MAINTENANCE

- All wheel bearings are prelubricated and sealed. They require no subsequent lubrication.
- The body shroud has been sprayed with a clear sealant coating. You can apply a light coat of car wax to help it retain its high-gloss appearance.
- Check all electrical connections. Make sure they are tight and are not corroded. Batteries must sit flat within the battery boxes and battery well frame with the battery terminals facing inward toward each other. Refer to the battery wiring label for the correct wiring layout.

WARNING! Even though the power chair has passed the necessary testing requirements for ingress of liquids, you should keep electrical connections away from sources of dampness, including direct exposure to water or bodily fluids and incontinence. Check electrical components frequently for signs of corrosion and replace as necessary.

Daily Checks

- With the controller turned off, check the joystick. Make sure it is not bent or damaged and that it returns to the neutral position when you release it. Check the rubber boot around the base of the joystick for damage. Visually inspect the boot. Do not handle or try to repair it. See your authorized Pride Provider if there is a problem.
- Visually inspect the harness. Make sure that it is not frayed, cut, or has any wires exposed. See your authorized Pride Provider if there is a problem.
- Check for flat spots on solid tires. Flat spots could adversely affect stability.
- Inspect the seating system, armrests, and front riggings for loose hardware, stress points, or damage. See your authorized Pride Provider if there is a problem.

Weekly Checks

- Inspect the controller and charger harnesses for corrosion. Contact your authorized Pride Provider if necessary.
- Ensure that all parts of the controller system are securely fastened to your power chair. Do not overtighten any screws.
- Check for proper tire inflation. If a tire does not hold air, contact your authorized Pride Provider for replacement of the tube.
- Check the brakes. This test should be carried out on a level surface with at least 3 feet (1 meter) of clearance around your power chair.

To check the brakes:

1. Turn on the controller and turn down the speed level of your power chair.
2. After one second, check the battery condition meter. Make sure that it remains on.
3. Slowly push the joystick forward until you hear the electric brakes click. Immediately release the joystick. You must be able to hear each electrical brake operating within a few seconds of joystick movement. Repeat this test three times, pushing the joystick backward, then left, and then right.

Monthly Checks

- Check that the anti-tip wheels do not rub the ground when you operate the power chair.
- Check for extreme wear on the anti-tip wheels. Replace them as necessary.
- Check for drive tire wear. See your authorized Pride Provider for repair.
- Check the caster wheels for wear. Replace them as necessary.
- Check the caster forks for damage or fluttering which indicates that they may need to be adjusted or have the bearings replaced. See your authorized Pride Provider for repair.
- Check the entire power chair for loose hardware and changes in the function or performance of the power chair. See your authorized Pride Provider for service or repair.
- Keep your power chair clean and free of foreign material, such as mud, dirt, hair, food, drink, etc.

Yearly Checks

Take your power chair to your authorized Pride Provider for yearly maintenance, especially if you use your power chair on a daily basis. This helps ensure that your power chair is functioning properly and helps prevent future complications.

VII. CARE AND MAINTENANCE

Storage

Your power chair should be stored in a dry place, free from temperature extremes. When storing, disconnect the batteries from the power chair. See VI. “Batteries and Charging.”

WARNING! If you fail to store the unit properly, the frame can rust and the electronics can be damaged.

Batteries that are regularly and deeply discharged, infrequently charged, stored in extreme temperatures, or stored without a full charge may be permanently damaged, causing unreliable performance and limited service life. It is recommended that you charge the batteries periodically throughout periods of prolonged storage to ensure proper performance.

You may wish to place several boards under the frame of your power chair to raise it off of the ground during periods of prolonged storage. This takes the weight off the tires and reduces the possibility of flat spots developing on the areas of the tires contacting the ground.

Disposal of Your Power Chair

Your power chair must be disposed of according to applicable local and national statutory regulations. Contact your local waste disposal agency or authorized Pride Provider for information on proper disposal of power chair packaging, metal frame components, plastic components, electronics, batteries, neoprene, silicone and polyurethane materials.

Cleaning and Disinfection

- Use a damp cloth and mild, non-abrasive cleanser to clean the plastic and metal parts of your power chair. Avoid using products that may scratch the surface of your power chair.
- If necessary, clean your product with an approved disinfectant. Make sure the disinfectant is safe for use on your product before application.

WARNING! Follow all safety instructions for the proper use of the disinfectant and/or cleaning agent before applying it to your product. Failure to comply may result in skin irritation or premature deterioration of upholstery and/or power chair finishes.

WARNING! Never hose off your power chair or place it in direct contact with water. Your power chair has a painted, ABS plastic body shroud that allows it to be easily wiped clean with a damp cloth.

WARNING! Never use any chemicals to clean a vinyl seat, as they may cause the seat to become slippery or dry out and crack. Use soapy water and dry the seat thoroughly.

Wheel Replacement

Your power chair is equipped with solid tires. If a tire becomes damaged, you must replace the whole wheel assembly. Replacement wheel assemblies are readily available through your authorized Pride Provider.

WARNING! The wheels on your power chair should only be serviced or replaced by an authorized Pride Provider or a qualified technician.

WARNING! Be sure that the power to the controller is turned off and the power chair is not in freewheel mode before performing this procedure.

WARNING! When changing a tire, remove only the center lug nut and washer, then remove the wheel. If any further disassembly is required, deflate the tire completely or it may explode.

Follow these easy steps for a quick and safe replacement of solid tires:

1. Turn off the power to the controller.
2. Make sure that the power chair is in drive mode. **See figure 4.**
3. Raise and support the power base so that the wheel is at least 1 in. (2.54 cm) off of the ground.
4. Remove the drive wheel nut and washer from the axle. **See figure 17.**
5. Remove the drive wheel from the axle. Make sure that you keep the axle key.
6. Replace the entire assembly.
7. Slide the wheel back onto the axle. Make sure that the axle key is in the axle slot.

WARNING! Ensure that the axle key is properly installed into the axle slot when mounting the wheel. If not installed securely, the braking system is disengaged which may cause personal injury and/or product damage may result.

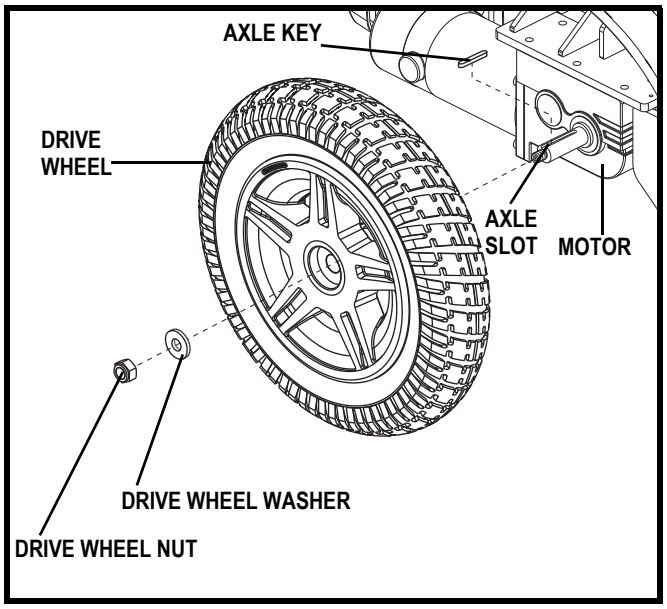

Figure 17. Jazzy Elite Series Drive Wheel Removal

8. Reinstall the drive wheel nut and washer onto the axle and tighten. **See figure 17.**

WARNING! Make sure both the nut and the washer are reinstalled and tightened properly.

9. Remove the power chair from the base support.

NOTE: Any nylon insert lock nut removed during the disassembly or adjustment of the power chair must be replaced with a new nylon insert lock nut. Nylon insert lock nuts should not be reused as it may cause damage to the nylon insert, resulting in a less secure fit. Replacement nylon insert lock nuts are available at local hardware stores or by contacting your authorized Pride Provider.

Battery Replacement

A battery wiring diagram is printed on a decal located on the power base. See VI. “Batteries and Charging” for correct battery specifications.

MANDATORY! Battery posts, terminals, and related accessories contain lead and lead compounds. Wear goggles and gloves when handling batteries and wash hands after handling.

WARNING! The batteries in your power chair should only be serviced or replaced by an authorized Pride Provider or a qualified technician.

WARNING! Do not replace batteries when seat is occupied.

WARNING! Power chair batteries are heavy. Refer to the product specifications. If you are unable to lift that much weight, be sure to get help. Use proper lifting techniques and avoid lifting beyond your capacity.

WARNING! Do not mix old and new batteries. Always replace both batteries at the same time.

PROHIBITED! Keep tools and other metal objects away from the battery terminals. Contact with tools can cause electrical shock.

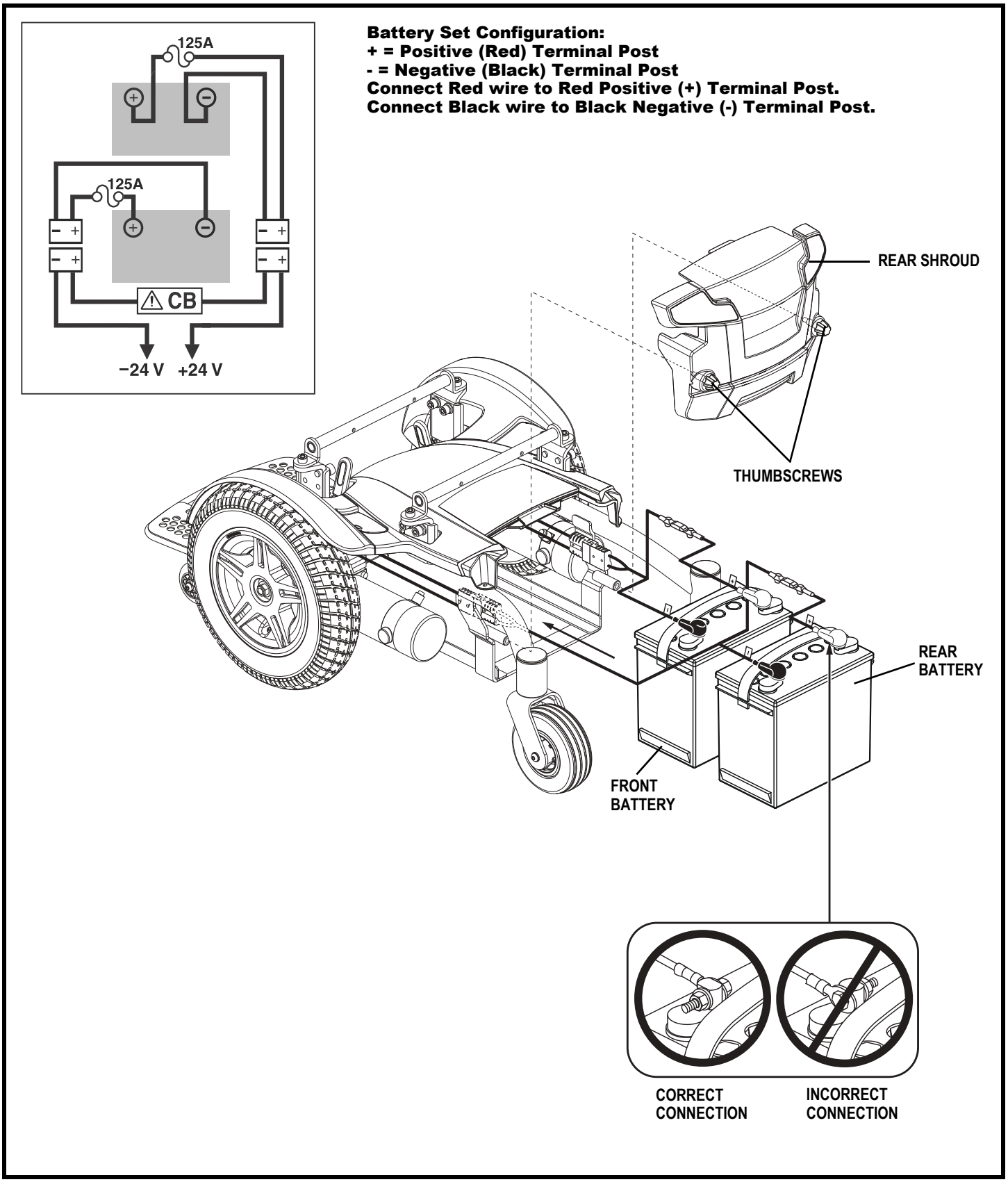

Figure 18. Battery Installation

You may need the following to change your batteries:
- metric/standard socket set and ratchet
- adjustable wrench

To replace the batteries:
1. Place the power chair on a flat, level surface.
2. Turn off the power to the controller.
3. Make sure the power chair is in drive mode. **See figure 4.**
4. Disconnect the controller harness from the power base.
5. Loosen the thumbscrews from the rear of the power chair. **See figure 18.**
6. Remove the rear shroud.
7. Disconnect the battery cables from the terminals of each battery. **See figure 18.**
8. Remove both batteries from the power base.
9. Install new batteries into the power base. Make sure the terminals of each battery are facing the rear of the power chair. **See figure 18.**
10. Connect the front battery cable to the front battery terminals according to the battery wiring diagram. Make sure that the battery terminal hardware is facing the correct direction. **See figure 18.**
11. Connect the rear battery cable to the rear battery terminals according to the battery wiring diagram. Make sure that the battery terminal hardware is facing the correct direction. **See figure 18.**

WARNING! Make sure you tighten the fasteners so that the connections are secure.

12. Tighten the thumbscrews to secure the rear shroud.
13. Reconnect the controller harness to the power base.
14. Charge the batteries. See VI. “Batteries and Charging.”

When to Contact Your Authorized Pride Provider for Service

The following symptoms could indicate a serious problem with your power chair. If necessary, contact your authorized Pride Provider. When calling, have the model number, serial number, nature of the problem, and the error code if available.
- Motor noise
- Frayed harnesses
- Cracked or broken connectors
- Uneven wear on any of the tires
- Jerky motion
- Pulling to one side
- Bent or broken wheel assemblies
- Does not power up
- Powers up, but does not move
- Loose seat or seating components

Corrective Maintenance

If the battery condition meter does not light up when you turn on the power:
- Check the harness connections. Make sure they are tight.
- Check the circuit breaker. Reset it if necessary.
- Check the battery connections.

If the above conditions prove normal, you can load test the batteries with a battery load tester. These testers are available at automotive parts stores. Disconnect both batteries before load testing and follow the directions that come with the load tester. If either one of the batteries fails the load test, replace both of them. If your power chair still does not power up, contact your authorized Pride Provider.

NOTES

NOTES

Quality Control – Jazzy Elite Series

☐ **Inclusion of all Parts**

_____
Joystick Serial Number

_____
Controller Serial Number

_____
Left Motor Serial Number

_____
Right Motor Serial Number

☐ **Fit and Finish**

☐ **Performance**

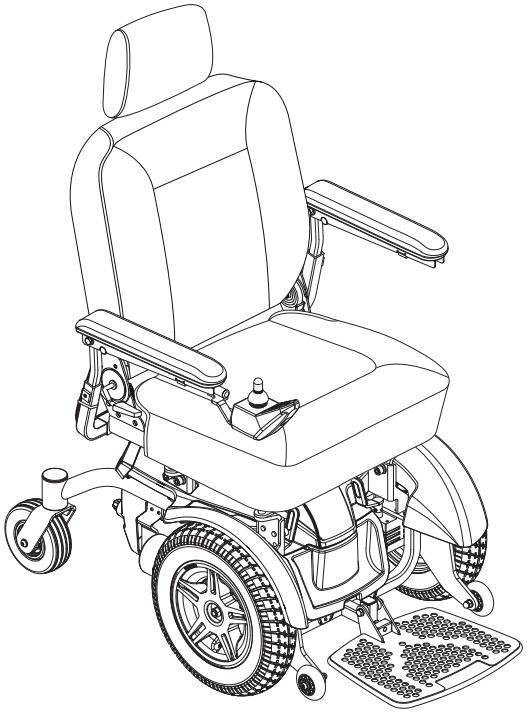

Pride keeps a more detailed report on file at the factory.

_____
Date Inspected

_____
Inspector

INFMANU4371

_____
Product Serial #